VZ-LINK MAGAZINE

ISSUE No. 27 DECEMBER 88

NEW ZEALAND

VZ 300/200

COMPUTER USERS CLUB

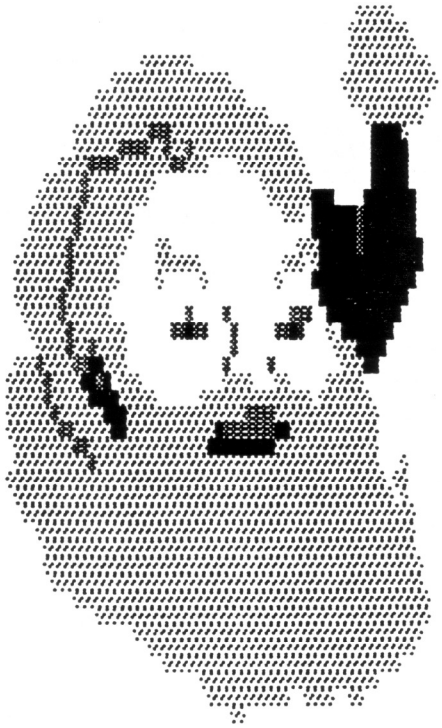

SEASONS GREETINGS

THIS MONTHS NEWS AND VIEWS

Thank you for all the postive comment on what you think of the Newsletter.

If there is something you would like to see in the newsletter,please do let me know.
I am sure you all have ideas and suggestions that can help.

The workshop went well,I'am only sorry more of you couldn't make it. The short notice was due to a number of errors.

Anyway,the next meeting will be held on 4th February 1989.
I hope to change the format a little next meeting,if I can.
If you have ideas or want to give a demo or talk,let me know as soon as possible.

I haven't had much input for the high scores list.
Come on were are all the Game players out there.
Anyway enough of the small talk:::

I would like to wish you all a very merry christmas and
a happy VZ new year.

Regards PETER.

WANTED TO BUY

Any second hand WORKING Vz equipment esp-DISK DRIVES.
I have several members after Disk Drives,so if you know of VZ equipment forsale
please contact me as soon as possible.

SCREENDRAW

This program was converted for tape save and load by BROOKE SPONG.

```
30 POKE 30969, 11:POKE 30970,132
50 POKE 30971, 11:POKE 30972,132
70 POKE 30973, 11:POKE 30974,132
90 POKE 30897,255:POKE 30898,240
110 POKE 30880,205:POKE 30881,240
150 CLS:PRINT:PRINT:PRINT:PRINT
170 PRINT"     DRAW SCREEN AND SAVE":PRINT
180 PRINT"     LOAD":PRINT
190 PRINT"     REDRAW AND SAVE":PRINT
200 A$=INKEY$:A$=INKEY$
205 IFA$<>"D"ANDA$<>"R"ANDA$<>"L"THENGOTO200
210 IFA$="D"THENGOTO6000
220 IFA$="L"THENGOSUB500
230 IFA$="R"THENGOTO600
240 GOTO160

500 GOSUB3500
510 GOSUB4500
520 RETURN
600 GOSUB2500
640 GOSUB 6050
650 GOSUB 2000
660 GOSUB 3000
```

```
670 GOSUB 4000
680 GOTO30
2000 MF=28672
2020 MT=-29440
2030 FORMV=0TO2047
2040  POKEMT+MV,PEEK(MF+MV)
2050 NEXT
2060 RETURN
2500 CLS:MODE(1)
2520 MT=28672
2530 MF=-29440
2540 FORMV=0TO2047
2550  POKEMT+MV,PEEK(MF+MV)
2560 NEXT
2580 RETURN
3000 CLS:PRINT
3020 PRINT"  START RECORDING AND PRESS";
3030 PRINT"        RETURN."
3040 GOSUB10000
3050 PRINT@193," RECORDING"
3060 RETURN
3500 CLS:PRINT
3520 PRINT" PRESS RETURN AND START TAPE"
3530 GOSUB10000
3540 RETURN
4000 POKE30884,0:POKE30885,141
4030 POKE30969,255:POKE30970,148
4040 CSAVE "SCREEN DUMP"
4060 POKE30884,233:POKE30885,122
4070 POKE30969, 11:POKE30970,132
4080 PRINT:PRINT"  DONE"
4090 FORT=1TO1000:NEXT
4100 RETURN
4500 POKE30897,255:POKE30898,247
4540 POKE30880,205:POKE30881,247
4550 CRUN"SCREEN DUMP"
4560 RETURN
5010 FORA=1TO100:NEXT:SET(X,Y):FORA=1TO100:NEXT
5015 RETURN
5020 X=X-1:IFX<0ORX>127THENX=X+1
5025 RETURN
5030 X=X+1:IFX<0ORX>127THENX=X-1
5035 RETURN
5040 Y=Y-1:IFY<0ORY>63THENY=Y+1
5045 RETURN
5050 Y=Y+1:IFY<0ORY>63THENY=Y-1
5055 RETURN
5060 SET(X,Y):X=X-1:IFX<0ORX>127THENX=X+1
5065 RETURN
5070 SET(X,Y):X=X+1:IFX<0ORX>127THENX=X-1
5075 RETURN
5080 SET(X,Y):Y=Y-1:IFY<0ORY>63THENY=Y+1
5085 RETURN
5090 SET(X,Y):Y=Y+1:IFY<0ORY>63THENY=Y-1
5095 RETURN
5100 COLORI
5105 RETURN
6000 CLS:PRINT:PRINT:PRINT
```

```
6011 PRINT"USE ARROW KEYS & KEEP CURSOR "
6012 PRINT"1 TO 4 SELECTS COLOURS
6013 PRINT"5      TRANSPERANT PEN
6014 PRINT"6      RANDOM COLOURS"
6016 PRINT"7      SAVE PICTURE TO TAPE"
6017 PRINT"8      INVERSE SCREEN"
6018 PRINT"9      CLEAR SCREEN-START AGAIN"
6020 PRINT"0      BACK TO MAIN MENU "
6021 PRINT
6022 PRINT"    PRESS RETURN TO CONTINUE    "
6030 GOSUB10000
6043 MODE(1)
6050 B=1:R=1:T=1:C=1
6055 IFX=0THEND=1:X=64:Y=32
6100 C$=INKEY$:C$=INKEY$
6120 IFC$="M"THENX=X-1
6125 IFC$=","THENX=X+1
6130 IFC$="."THENY=Y-1
6140 IFC$=" "THENY=Y+1
6145 IFC$="I"THENY=Y-1:X=X-1
6150 IFC$="O"THENX=X+1:Y=Y-1
6155 IFC$="L"THENX=X+1:Y=Y+1
6160 IFC$="K"THENX=X-1:Y=Y+1
6161 IFX>126THENX=X-1:SOUND1,2
6162 IFX<1THENX=X+1:SOUND1,2
6163 IFY>62THENY=Y-1:SOUND1,2
6164 IFY<1THENY=Y+1:SOUND1,2
6175 IFC$="6"THENR=R*-1:SOUND23,1
6180 IFVAL(C$)>0ANDVAL(C$)<5THENC=VAL(C$):SOUND29,1
6182 IFR=-1THENC=RND(4)
6183 IFC$="7"THENSOUND18,1:GOTO650
6187 IFC$="8"THENB=B*-1:SOUND31,1
6188 IFB=-1THENCOLOR,1ELSECOLOR,0
6190 IFC$="5"THENT=T*-1:SOUND28,1
6195 E=POINT(X,Y):COLORE+1:SET(X,Y)
6196 IFC$="9"THENSOUND10,2:GOTO6000
6197 IFC$="0"THENSOUND10,2:GOTO30
6199 FORA=1TO100:IFJ=31THENNEXT
6200 IFT=1THENSET(X,Y):COLORE:SET(X,Y)ELSECOLORC:SET(X,Y)
6280 GOTO6100
10000 A$=INKEY$:A$=INKEY$:IFA$<>CHR$(13)THEN10000
10010 RETURN
```

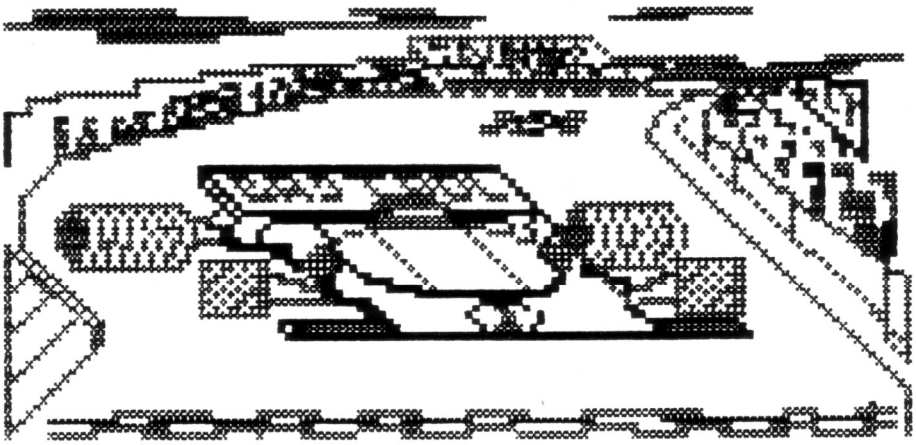

DRAWN USING THIS PROGRAM BY BROOKE SPONG
PRINTED USING PRINTER PATCH

CROSSWORDS

WRITTEN BY WHITTAKER HAMILTON

```
10 REM"XWORD 1"
20 CLS
25 PRINT:PRINT"              XWORD 1 ":PRINT
30 PRINT"YOU WILL BE ASKED TO SELECT  "
35 PRINT"CLUES AND GUESS WORDS. AT THE"
40 PRINT"COMPLETION OF YOUR ANSWER YOU"
45 PRINT"MUST ALWAYS PRESS THE <RETURN> "
50 PRINT"KEY. CLUES ARE DENOTED BY "
55 PRINT"LETTERS AND NUMBERS."
60 PRINT"EXAMPLE: PRESS A1 FOR 1 ACROSS"
65 PRINT"         PRESS D3 FOR 3 DOWN"
70 PRINT"THE NUMBER SHOWN AFTER THE CLUE"
75 PRINT"INDICATES THE NUMBER OF LETTERS"
80 PRINT
85 PRINT" PRESS RETURN TO CONTINUE":INPUT Z
90 CLS
100 A1$="▌":A2$="▌":A3$="▌▌":A4$="▌"
105 B1$="▌":B2$="▌":C1$="▌":C2$="▌"
110 C3$="▌":C4$="▌":C5$="▌":C6$="▌"
115 D1$="▌":D2$="▌":D3$="▌▌":D4$="▌"
120 E1$="▌":E2$="▌":E3$="▌▌":F1$="▌▌"
125 F2$="▌":F3$="▌":G1$="▌":G2$="▌▌":G3$="▌"
200 PRINT@104,"▌":PRINT@110,"▌":PRINT@134,"▌"
205 PRINT@135,A1$:PRINT@136,A2$:PRINT@137,A3$:PRINT@142,A4$
210 PRINT@168,B1$:PRINT@169,"▌":PRINT@172,"▌":PRINT@174,B2$
220 PRINT@199,"▌":PRINT@200,C1$:PRINT@201,C2$
225 PRINT@204,C3$:PRINT@205,C4$:PRINT@206,C5$:PRINT@207,C6$
230 PRINT@231,"▌":PRINT@232,D1$:PRINT@233,D2$:PRINT@234,D3$
235 PRINT@236,D4$:PRINT@265,E1$:PRINT@267,"▌":PRINT@268,E2$
240 PRINT@269,E3$:PRINT@293,"▌▌":PRINT@295,F1$:PRINT@297,F2$
245 PRINT@300,F3$:PRINT@327,"▌▌"
250 PRINT@329,G1$:PRINT@330,G2$:PRINT@332,G3$
300 PRINT@0,"                                        "
301 PRINT@32,"     SELECT A CLUE                 ":INPUTX$
305 IFX$="D1"THENGOTO400ELSEGOTO310
310 IFX$="D2"THENGOTO410ELSEGOTO315
315 IFX$="A3"THENGOTO420ELSEGOTO320
320 IFX$="D4"THENGOTO430ELSEGOTO325
325 IFX$="D5"THENGOTO440ELSEGOTO330
330 IFX$="A5"THENGOTO450ELSEGOTO335
335 IFX$="A6"THENGOTO460ELSEGOTO340
340 IFX$="A8"THENGOTO470ELSEGOTO345
345 IFX$="A9"THENGOTO480ELSEGOTO350
350 IFX$="A10"THENGOTO490ELSEGOTO355
355 IFX$="A11"THENGOTO500ELSEGOTO360
360 PRINT@0,"   YOU PRESSED THE WRONG KEYS,   STUPID, TRY AGAIN"
365 FORZ=1TO2000:NEXT:CLS:GOTO200
400 PRINT@0,"A HOLLOW CIRCLE <4>                                  "
402 INPUTDA$
405 IFDA$="RING"THENGOTO550ELSEGOTO700
410 PRINT@0,"  COVER <3>                                          "
412 INPUTDB$
415 IFDB$="LID"THENGOTO560ELSEGOTO700
420 PRINT@0,"MODE OF TRANSPORT <5>                                 "
422 INPUTAA$
425 IFAA$="TRAIN"THENGOTO570ELSEGOTO700
430 PRINT@0,"COMMAND <5>                                           "
432 INPUTDC$
```

```
433 REM CROSSWORD CONTINUED
435 IFDC$="ORDER"THENGOTO580ELSEGOTO700
440 PRINT@0,"BELOW <5>                                          "
442 INPUTDD$
445 IFDD$="UNDER"THENGOTO590ELSEGOTO700
450 PRINT@0,"RELEASE FASTENING <4>                              "
452 INPUTAB$
455 IFAB$="UNDO"THENGOTO600ELSEGOTO700
460 PRINT@0,"NEGATIVE REPLY <2>                                 "
462 INPUTAC$
465 IFAC$="NO"THENGOTO610ELSEGOTO700
470 PRINT@0,"CORN, MAIZE, ETC <5>                               "
472 INPUTAD$
475 IFAD$="GRAIN"THENGOTO620ELSEGOTO700
480 PRINT@0,"NOT BRIGHT <3>                                     "
482 INPUTAE$
485 IFAE$="DIM"THENGOTO630ELSEGOTO700
490 PRINT@0,"LESS THAN TWO <3>                                  "
492 INPUTAF$
495 IFAF$="ONE"THENGOTO640ELSEGOTO700
500 PRINT@0,"LIONS NOISE <4>                                    "
502 INPUTAG$
505 IFAG$="ROAR"THENGOTO650ELSEGOTO700
550 A2$="R":B1$="I":C1$="N":D1$="G"
555 CLS:GOTO200
560 A4$="L":B2$="I":C5$="D"
565 CLS:GOTO200
570 A1$="T":A2$="R":A3$="AIN"
575 CLS:GOTO200
580 C2$="O":D2$="R":E1$="D":F2$="E":G1$="R"
585 CLS:GOTO200
590 C3$="U":D4$="N":E2$="D":F3$="E":G3$="R"
595 CLS:GOTO200
600 C3$="U":C4$="N":C5$="D":C6$="O"
605 CLS:GOTO200
610 C1$="N":C2$="O"
615 CLS:GOTO200
620 D1$="G":D2$="R":D3$="AI":D4$="N"
625 CLS:GOTO200
630 E2$="D":E3$="IM"
635 CLS:GOTO200
640 F1$="ON":F2$="E"
645 CLS:GOTO200
650 G1$="R":G2$="OA":G3$="R"
655 CLS:GOTO200
700 PRINT@0,"    [illegible]                                    "
710 FORZ=1TO2000:NEXT:CLS:GOTO200
1000 GOTO1000
```

** PRINTER INTERFACES**
BY LAURIE WHETTON

Laurie purchased the Quick write program from Australia sometime back.
And that is when his fun began.
The program would not run with his printer interface.
so Laurie did some checking and found that there are at least Two if not more different interfaces available.
Laurie has drawn the Two circuits he has for us.

VZ 300 PRINTER INTERFACE P.C.B. 700358 G

NOT COMPATIBLE WITH EPSON PRINTER CONTROL CODES

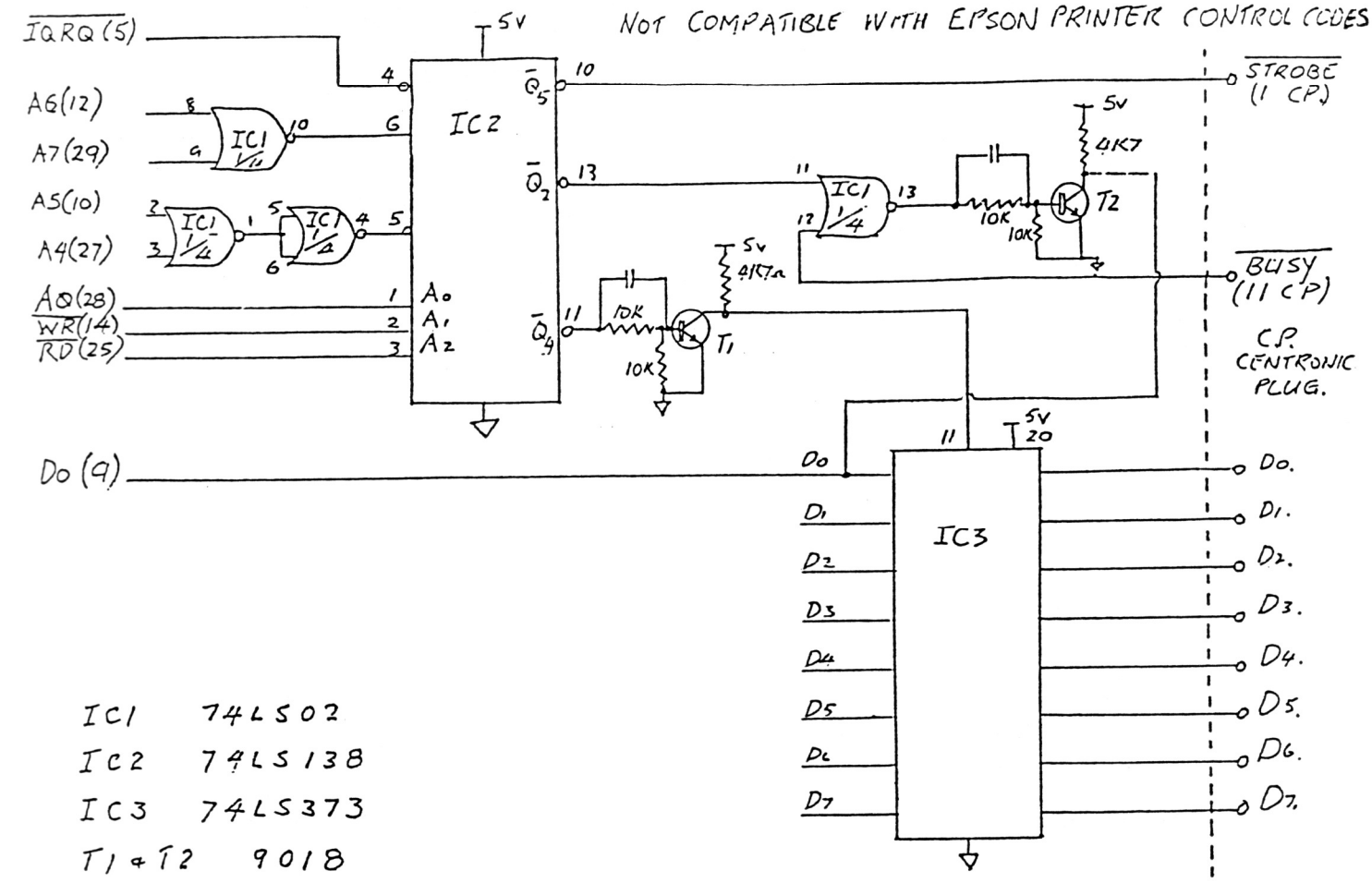

IC1 74LS02

IC2 74LS138

IC3 74LS373

T1 & T2 9018

VZ 200 PRINTER INTERFACE P.C.B. 700358D

COMPATIBLE WITH EPSON PRINTER CONTROL CODES

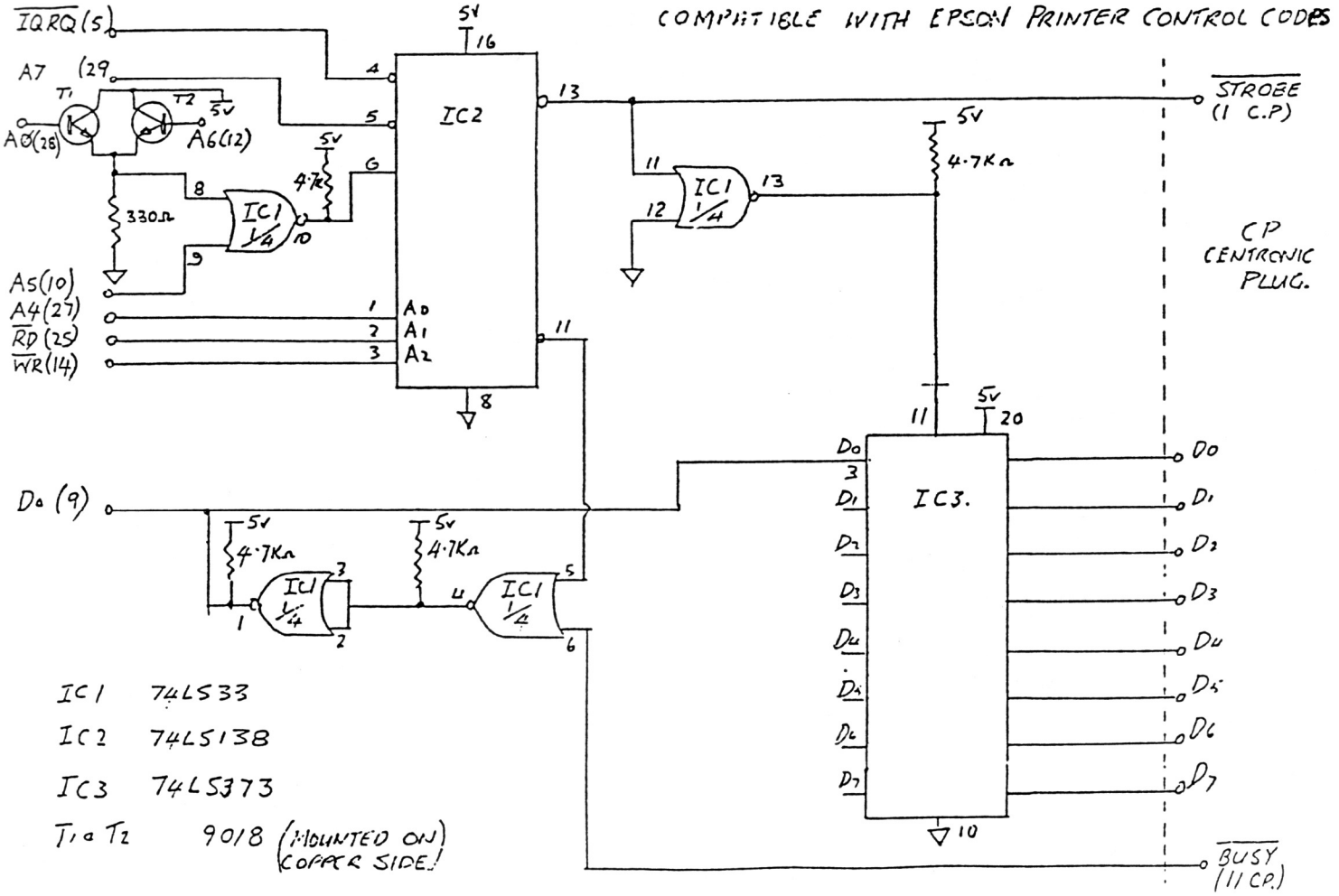

IC1 74LS33

IC2 74LS138

IC3 74LS373

T1 & T2 9018 (MOUNTED ON COPPER SIDE!)

PIZZA DELIVERY CO
BY KEITH WRIGHT

```
1 COLOR 8,1:REM PIZZA
5 CLS:PRINT @ 44,"PIZZA'S":PRINT@11,"▛▜"
10 PRINT @ 43,"▌":PRINT @ 51,"▌":PRINT @ 75,"▙▟"
15 A$="▀":FOR N=128 TO 447:PRINT@ N,A$;:NEXT
20 A$="▄":FOR N=97 TO 126:PRINT @ N,A$;:NEXT
25 A$="▬":FOR N=449 TO 478:PRINT@ N,A$;:NEXT
30 PRINT @ 96,"▗":PRINT @ 127,"▗":PRINT @ 448,"▝":PRINT@479,"▝"
35 FOR N=96 TO 384 STEP 32:PRINT @ N,"▌":NEXT
40 FOR N=127 TO 415 STEP 32:PRINT @ N,"▌";:NEXT
45 PRINT @ 265," WE DELIVER ";
50 FOR N=12 TO 31 STEP 3:SOUND N,1:NEXT:CLS
55 PRINT @ 360,"INSTRUCTIONS,(Y/N)
60 GOSUB 1000:IF A$<>"Y" AND A$<>"N" THEN 60
65 GOSUB 1050
70 IF A$="N"THEN 130
80 CLS:PRINT"  IN THIS GAME,YOU TAKE ORDERS"
90 PRINT"FOR  PIZZAS.   THEN, WHEN  THE"
100 PRINT"DELIVERY BOY CALLS UP,YOU TELL"
110 PRINT"HIM WHERE TO DELIVER THE PIZZA."
120 PRINT@320,"ALL OK SO FAR (Y/N)";:GOSUB 1000:IFA$<>"Y"THEN120
130 CLS:INPUT"HELLO, WHAT IS YOUR FIRST NAME";N$:CLS
135 FOR N=1TO4*(ASC(N$)):XR=RND(N):NEXT
140 PRINT"HERE IS THE MAP OF THE PIZZA"
150 PRINT"BUYERS ADDRESSES,";N$
160 PRINT"   ----1---2---3---4---"
170 PRINT"   1---A---B---C---D---"
180 PRINT"   2---E---F---G---H---"
190 PRINT"   3---I---J---K---L---"
200 PRINT"   4---M---N---P---R---"
210 PRINT"   --------------------"
220 IF Z=0THEN GOSUB 1100 ELSE 240
230 GOSUB 1000:IF A$<>"R"THEN Z=0 ELSE CLS:GOTO 160
235 CLS:GOTO 140
240 PRINT:PRINT"HELLO,";N$;"'S PIZZAS,"
250 X=RND(16):PRINT"THIS IS ";C$(X);",PLEASE SEND A PIZZA"
260 PRINT"------"
270 PRINT"DRIVER TO ";N$;",WHERE"
280 PRINT"DOES ";C$(X);" LIVE ";
290 INPUT F,G
300 IF A(F,G)=ASC(C$(X))THEN GOTO 330
310 PRINT N$;", THIS IS ";CHR$(A(F,G));","
320 PRINT"I DIDN'T ORDER THIS PIZZA !":GOTO 270
330 PRINT"THIS IS ";C$(X);" THANKS ";N$:GOTO 900
900 PRINT"   DO YOU WANT TO DO SOME MORE"
910 PRINT"DELIVERIES ";N$;" (Y/N)"
920 GOSUB 1000:IF A$="Y"THEN CLS:GOTO 140
940 IF A$="N" THEN 960
950 GOTO 920
960 CLS:PRINT @ 224,"GOODBYE FROM THE PIZZA HUT..."
970 RUN"MENU"
999 STOP
1000 A$=INKEY$:A$=INKEY$:IF A$=""THEN 1000
1010 SOUND 31,1
1020 IF INKEY$<>""THEN 1010
1030 RETURN
1050 DIM C$(17):Z=0:RESTORE
```

```
1055 REMPIZZA CONTINUED
1060 DATA A,B,C,D,E,F,G,H,I,J,K,L,M,N,P,R,S
1070 FOR N=1 TO 16:READ C$(N):NEXT
1075 RESTORE:DIM A(5,5):FOR N=1 TO 4:FOR O=1 TO 4
1080 READ Z$:A(N,O)=ASC(Z$):NEXT O:NEXT N
1095 RETURN
1100 PRINT" NOW, EACH BUYER'S ADDRESS HAS"
1110 PRINT"ONE NUMBER DOWN,  AND  ANOTHER"
1120 PRINT"ACROSS,SO MR.A'S ADDRESS IS 1,1"
1130 PRINT"AND MR. C LIVES AT 1,3."
1150 Z=1:PRINT"WHEN YOU'RE READY, TYPE 'R'":RETURN
```

ZAP A DOT

WRITTEN BY KEITH WRIGHT FOR JOYSTICK USE

```
1  GOSUB900:REM"ZAP"
5 S=0:C=0
10 CLS:X=63:Y=31:MODE(1):SET(X,Y):COLOR4,0
20 A=(INP(43)AND31):B=(INP(39)AND16):C=C+1
25 A$=INKEY$:A$=INKEY$:IFA$="Q"THEN 1000
30 IFRND(50)=7THENGOSUB500ELSEIFA=31THEN20
35 IFB=16THENB=1ELSEB=4
40 RESET(X,Y):IFC>2000THEN600
50 IFA=21THENX=X+B:Y=Y+B:GOTO200
60 IFA=22THENX=X+B:Y=Y-B:GOTO200
70 IFA=23THENX=X+B:GOTO200
80 IFA=25THENX=X-B:Y=Y+B:GOTO200
90 IFA=26THENX=X-B:Y=Y-B:GOTO200
100 IFA=27THENX=X-B:GOTO200
110 IFA=29THENY=Y+B:GOTO200
120 IFA=30THENY=Y-B:GOTO200
200 IFX>127THENX=127
202 IFX<0THENX=0
204 IFY>63THENY=63
206 IFY<0THENY=0
210 IFPOINT(X,Y)=4THENS=S+RND(20)ELSE 250
225 RESET(X1,Y1)
230 FORN=17TO25:SOUNDN,1:NEXT
250 SET(X,Y):GOTO20
500 X1=RND(100)+10:Y1=RND(40)+10
516 SET (X1,Y1)
520 RETURN
600 MODE(0):PRINT@265,"SCORE =";S:INPUTA$:IFA$<>"Q"THEN5
620 CLS:PRINT@256,"   G O O D B Y E . . . ."
630 RUN"MENUT"
900 CLS:PRINT TAB(14);"[redacted]":POKE30744,1
910 PRINT:PRINT"     THE AIM OF THE GAME IS TO"
920 PRINT"ZAP THE DOTS, AND SCORE POINTS"
930 PRINT"USING THE 'L' JOYSTICK. THE RT."
940 PRINT"HAND BUTTON LETS YOU MOVE FAST,"
950 PRINT"THE LEFT ONE FLASHES YOUR DOT."
960 PRINT"IF YOU ZAP AN OLD DOT THE LAT-"
970 PRINT"-EST ONE ALSO VANISHES !"
975 PRINT:PRINT:PRINT"WHEN YOU'VE HAD ENOUGH, TYPE'Q'
980 PRINT:PRINT"    PRESS 'RETURN' TO START."
990 INPUTA$:POKE30744,0:CLS:RETURN
1000 RUN"MENU"
```

32K RAM–64K EPROM – D. NEWCOMBE

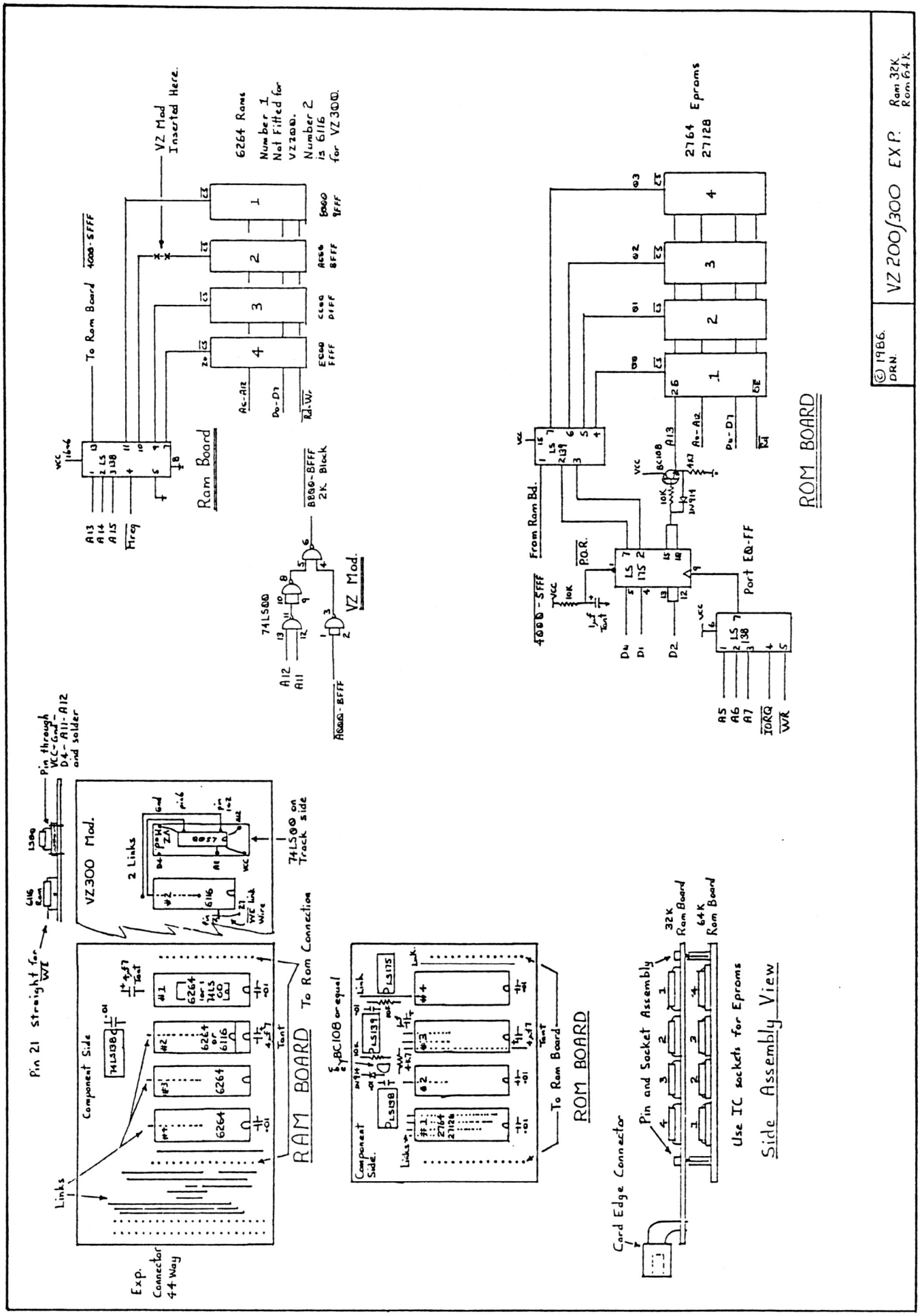

32K RAM-64K EPROM CONT.

REVIEW by Joe LEON :-

David Newcombe's ram/rom boards have been available for some time although it has'nt been widely known. The ram board is designed to fit inside a memory expansion case and uses it's edge connector which has to be removed from the old board first. The rom board can't be used on it's own as it's been designed to be piggy backed onto the ram board.

In the past David has assembled the boards with memory and or eprom chips as required and you may also be able to purchase just the bare boards like I did. And now to the boards.

32K RAM BOARD :-
It can be used with both VZ 200 and 300. For VZ 200 four 8K rams are used with ram 1 overlaying 4K of internal 6K ram. For VZ 300 only two 8K and a 2K rams are used. In both cases a maximum allowable 34K ram is achieved. T.O.M. is FFFFH (65535), maximum addressable by the Z80.

4K to 64K ROM BOARD :-
Like the ram board, the rom board board can be used with both VZ 200/300 computers. The rom board as is cannot be used with disk drives as it occupies same memory location as the dos rom, 4000H to 5FFFH (8K).

Up to four 4K, 8K or 16K eproms can be used giving from 4K to 64K available to the user. To fit up to 64K in an 8K area bank switching techniques have been used.

The first eprom will have a MENU programmed into it by David. It will also contain a couple of diagnostic programmes for fault finding, some helpful hints, any machine code programmes you might like placed into it, provided of course, that there is sufficient space available. All other eproms will be acessed through the built in menu.

What does it all mean ?

The ram board will expand your VZ 200/300 internal memory to a full 34K of user ram.

The rom board will allow tape based users instant acess to it's built in programs of your choice which you provide for burning into eprom. Some examples are word processors, data bases, etc.

As mentioned before, I purchased just the bare boards for experimentation because they are specifically designed for the VZ. I'm in the process of converting the ram board for 8K sideways ram, 6000H-67FFH area, pseudo 8K Dos and 16K Basic Rom/s which will be battery backed and just by flicking a couple switches revert to a ram pack again.

For prices and availability write to :-

D.NEWCOMBE 928-960 BEENLEIGH - REDLAND BAY ROAD, MSI - 1311
CARBROOK 4130 - QUEENSLAND

PS - Don't forget to include a Stamped Self Addressed Envelope.

FINAL NOTE - David is a very busy man and sometimes his job takes him away from home for months at a time. So if you write to him, please be patient.

SOFTWARE FOR SALE FROM VSOFTWAREZ

39 Agnes St., TOOWONG. QLD. 4066. AUSTRALIA. (07) 371 3707.

NOVEMBER 1988.

We are discontinuing most of our software as from the above date.
We will only stock the most popular units.
The list under "EXISTING SOFTWARE" is items we will continue to sell. Those marked "+LL" include a LLISTing so that you can modify it to suit your own needs.
The list under "DISCONTINUED SOFTWARE" is what we still have in stock. Other items not listed at all will not be supplied. I will print a list of software writers who may supply items direct to purchasers. It is just not viable for us to stock items that are not selling. Prices of most software is now reduced to clear stocks. We trust you understand.

All prices are correct at time of printing, but may change without notice. All articles available while stocks last. All prices in A$.
All tape software includes postage up to four tapes.
When ordering software, always state := which computer VZ200 or VZ300, if you have an expansion RAM unit , and if you have a disc drive system connected or denote as below.

VZ1 = unexpanded VZ200. VZ2 = unexpanded VZ300.
VZ3 = expanded VZ200. VZ4 = expanded VZ300.

IE. TB15 = Tape only unit of B15. DB5 = Disc only unit of B5.
T/DE4 = Tape or Disc unit available of E4. TU4 = unit only available on Tape of U4. DU22 = unit only available on Disc of U22.
The price stated is for a Tape unit. If a Disc unit is required, add $5.00. to the Tape price. The price of a Disc unit is as stated.

We accept BANKCARD and VISACARD, as well as bank, building society, credit union, private cheques, or Aust Post money orders.
Make cheques payable to J.D'ALTON or VSOFTWAREZ.

* * * NEW SOFTWARE * * *

DT658. FACTORY. $15.00. VZ3-VZ4.
This is another one of Larry taylors educational/game units. It is a problem solving eductional/game for all ages. The main aim is to set up a factory to duplicate a product which has been designed by the VZ or someone. Eight machines can be used to ROTATE, STRIPE and PUNCH a blank square into a finished product. All in High Resolution.

DU56. DISKOPS4. $10.00. VZ3-VZ4.
This is actually called DISKOPS4 + 2. It superceedes DU47 DISKOPS2 AND DU47A DISKOPS2 which are now Public Domain at the same price of $10.00.
There are three separate utilities on the disc, and are for use with the DSE. Editor Assembler unit. There are eleven additional commands. Instructions are included. DISKOPS4 + 2 patches in permanently with ED/ASS. It then allows LOADing, SAVEing of source code and BSAVEing object code to/from disc. BSAVEing is the same as TO: for tape.
It also includes the normal disc BASIC commands. If a disc error occurs, then DISKOPS4 + 2 BASIC is entered. ASS is to enable the return to the ED/ASS. BASIC does the reverse.
Users of DISKOPS1 and 2 are also catered for.

DB57. QUICKWRITE V4 $40.00. VZ3-VZ4.
This new version DOES NOT replace QUICKWRITE V3. The main difference being that V4 allows the user to imbed special character codes ANYWHERE in the text. This includes a single word or even part of a word, anywhere in a line of text. If you refer to LE'VZ #17 on page 14, I printed a short article about how to use the printer control codes for QW V3. The last one directs the printer to print in three styles, using thirteen codes. With QW V4 these are designed by the user and are represented by A SINGLE CODE CHARACTER and saved onto disc. A whole set of fonts can be built up by the user. I have been using it for some months now in the publishing of the last few LE'VZ magazines.
QW V4 will also recognise the QW V3 square bracketed control codes. Printing a section of the text is also allowable, even one word.
KILL and RETRIEVE are additional Disc commands. Better editing/viewing facilities. Scrolling forward, backward, to beginning and end of text is easy to achieve.
Purchasers of QW V3 can buy QW V4 at a discounted price of AUD$20.00. An instruction booklet is of course included.

QUICKWRITE CAN ONLY BE PURCHASED FROM US.

+ EXISTING SOFTWARE +

D/TB1	CASH BOOK LEDGER	$ 20.00.	VZ3-VZ4.	+LL
D/TE4	MATHS COUNTDOWN	$ 5.00.	VZ3-VZ4.	
DB4	LE'VZ D'BASE	$ 50.00.	VZ3-VZ4.	+L
TU6	VZ EXTENDED BASIC	$ 20.00.	VZ1-VZ4.	
DB16	CHEQUE LEDGER D.	$ 40.00.	VZ3-VZ4.	+L
D/TU19	COPY/PROTECT.	$ 20.00.	VZ1-VZ4.	
D/TU48	FILESEARCH.	$ 5.00.	VZ1-VZ4.	
D/TG44	MONOPOLY.	$ 8.00.	VZ3-VZ4.	
D/TG45	MONOPOLY.	$ 8.00.	VZ4.	
D/TG50	ESCAPE RIVER.	$ 8.00.	VZ3-VZ4.	
DB46	QUICKWRITE.	$ 40.00.	VZ3-VZ4.	
D/TU49	VZ-EPSON PRINT/PATCH.	$ 10.00.	VZ1-VZ4.	
DU1	CONVERT2.	$ nil	VZ3-VZ4.	
See DB46 QUICKWRITE.				
D/TG53	GALACTIC EMPIRES.	$ 8.00	VZ3-VZ4.	
D/U56	DISKOPS4 +2.	$ 10.00.	VZ3-VZ4.	
DB57	QUICKWRITE V4.	$ 40.00.	VZ3-VZ4.	
D/TG58	FACTORY.	$ 15.00.	VZ4.	
D/TG59	NAME THE TOWNS.	$ 5.00.	VZ3-VZ4.	

DISCONTINUED SOFTWARE

All 50% off
While stocks last.

D/TU2	EDITOR/ASSEMBLER	$ 20.00.	VZ3-VZ4.
D/TE1	KEYBOARD	$ 8.00.	VZ1-VZ4.
D/TE3	MEATPIES	$ 10.00.	VZ3-VZ4.
D/TU3	UTILITYS	$ 15.00.	VZ2-VZ4.
D/TE5	COORDINATES	$ 10.00.	VZ2-VZ4.
D/TE6	TOWER of HANOI	$ 8.00.	VZ1-VZ4.
D/TE7	MICROSCOPE	$ 8.00.	VZ3-VZ4.
DU22	DISCOPY	$ 10.00.	VZ1-VZ4.
D/TU48	FILESEARCH	$ 10 00	VZ1 VZ4.
DU47A	DISKOPS2	$ 10.00.	VZ4.
TG42	AIRTRAFFIC CONTROLLER.	$ 20.00.	VZ3-VZ4.
D/TG54	GOLF.	$ 15.00.	VZ3-VZ4.
TU18	LOAD XX80 FILES.	$ 20.00.	VZ1-VZ4.
This new version finds VZ memory size itself.			
D/TG52	SOLO BATTLESHIPS.	$ 15.00.	VZ2-VZ4.
DPD2	PUBLIC DOMAIN.	$ 10.00.	VZ1-VZ4.
DPD1	PUBLIC DOMAIN.	$ 10.00.	VZ1-VZ4

SOFTWARE FOR SALE

We now have the following software available for sale.
All prices shown include postage and packing anywhere in New Zealand.
Please make sure that the memory of your VZ is greater than or equal to the memory required by the software that you wish to purchase.
Memory sizes indicated do not include video ram.

ALL PRICES ARE SHOWN IN NEW ZEALAND DOLLARS.

BLACKJACK ROYALE	16K	$15.00	HAUNTED MANSION	22K	$15.00
CASTLE GREYSTONE	32K	$15.00	KNIGHTS QUEST	32K	$18.00
DATA	16K	$18.00	NAMESTAR/SHOPSTAR	22K	$15.00
FBI-2001	31K	$18.00	SCOTLAND YARD	16K	$ 8.00
GALACTIC EMPIRES	16K	$15.00	TRIVIAL CULT	16K	$ 8.00
GRAPHSTAR	22K	$24.00	VZ MONOPOLY V2.0	22K	$18.00

PLEASE MAKE ALL CHEQUES AND MONEY ORDERS PAYABLE TO-

AUCKLAND VZ 300/200 COMPUTER CLUB.

VZ DISASSEMBLER FOR SALE

This Disassembler is written by Peter Hickman.
And is also distributed as the "Laserlink Disassembler".

Peter is offering this very fine program to user group members for NZ$24.00.
All orders can be placed through this club,as peter has offered a cheaper price for bulk purchases.

The program is available on tape or disk.And comes in a 4 program version and
You choose which section you use depending on what memory you have.

ALL THESE PROGRAMS CAN BE DEMONSTRATED AT THE WORKSHOP IF REQUESTED

P.O.BOX 1972 C.P.O AUCKLAND N.Z

(C) AUCKLAND VZ 300/200 COMPUTER USER'S CLUB 1986

ALL MATERIAL IN THIS NEWSLETTER IS SUBJECT TO COPYRIGHT..
CONTRIBUTED PROGRAMS & ARTICLES CAN BE REPRODUCED ON THE UNDERSTANDING THAT THEY ARE FOR THE PRIVATE USE OF SUBSCRIBERS ONLY.
COPYRIGHT IS ALWAY'S RETAINED BY THE AUTHOR.
THIS CLUB WILL NOT BE HELD RESPONSIBLE FOR THE BREECHING OF COPYRIGHT CAUSED BY THE PUBLICATION OF ANY MATERIAL SENT IN UNDER A FALSE NAME.

YOU ARE WELCOME TO PHONE ME AT WORK IF YOU HAVE PROBLEMS